Trade of Sheet Metalwork	
Module 1:	**Sheetmetal Fundamentals**
Unit 9:	**One-Piece Hemmed Tray**
	Phase 2

Table of Contents

List of Figures **4**

List of Tables **4**

Document Release History **5**

Module 1 – Sheetmetal Fundamentals **6**

Unit 9 – One-Piece Hemmed Tray 6
Learning Outcome: 6
Key Learning Points: 6
Training Resources: 7
Exercise: 7
Key Learning Points Code: 7

Sequence of Operations **9**

Basic Patterns **10**

Notching Patterns **11**

Notching 11
Square Notch 11
45º Notch 11
Straight Notch or Slit 12
Notches for Wired Edges 12
Notching for Single Hem 13

Self Assessment **14**

Answers to Questions 1-6. Module 1.Unit 9 ..... **17**

Index **20**

List of Figures

Figure 1 - One Piece Tray 8
Figure 2 - Bending Sequence 9
Figure 3 - One Piece Tray 10
Figure 4 - Three Piece Tray 10
Figure 5 - Notching 11
Figure 6 - 45º Notch 11
Figure 7 - Straight Notch or Slit 12
Figure 8 - Notches for Wired Edges 12
Figure 9 - Notching for Single Hem 13

List of Tables

Document Release History

Date	Version	Comments
07/07/06	First draft	
31/03/14	2.0	SOLAS transfer

Module 1 – Sheetmetal Fundamentals

Unit 9 – One-Piece Hemmed Tray

Duration – 3.5 Hours

Learning Outcome:

By the end of this unit each apprentice will be able to:

- Describe the use and care of various types of bench stakes
- Calculate blank size
- Plan sequence of job operations
- Mark-out, cut, drill, de-burr, fold and assemble tray to tolerance of ± 1 mm
- Check measurements using steel rule
- Differentiate between a good and a bad job, in finish and appearance

Key Learning Points:

Rk Sk	Use and care of tools, machinery and equipment especially bench stakes.
Rk	Job planning and sequence of operations.
D	Marking out procedure/development of tray.
Rk	Notching arrangement.
Sk	Cutting/material removal.
Sk	Drilling, deburring and filing.
Sk Rk	Bend/fold sequence/folding/correct blade alignment.
Sk	Correct assembly procedure.
Rk Sk	Blind riveting - selection & use of correct type, diameter and length of blind rivet.
Sk	Job free from twist. No sharp corners.
Rk	Ferrous metals - working properties - surface coating.
M	Calculation of blank size.

Training Resources:

- Toolkit
- 0.6mm galvanised mild steel
- Tools and machinery/equipment
- Safety equipment and protective clothing

Exercise:

Exercise 2.1.8.

Key Learning Points Code:

M = Maths D= Drawing RK = Related Knowledge Sc = Science

P = Personal Skills Sk = Skill H = Hazards

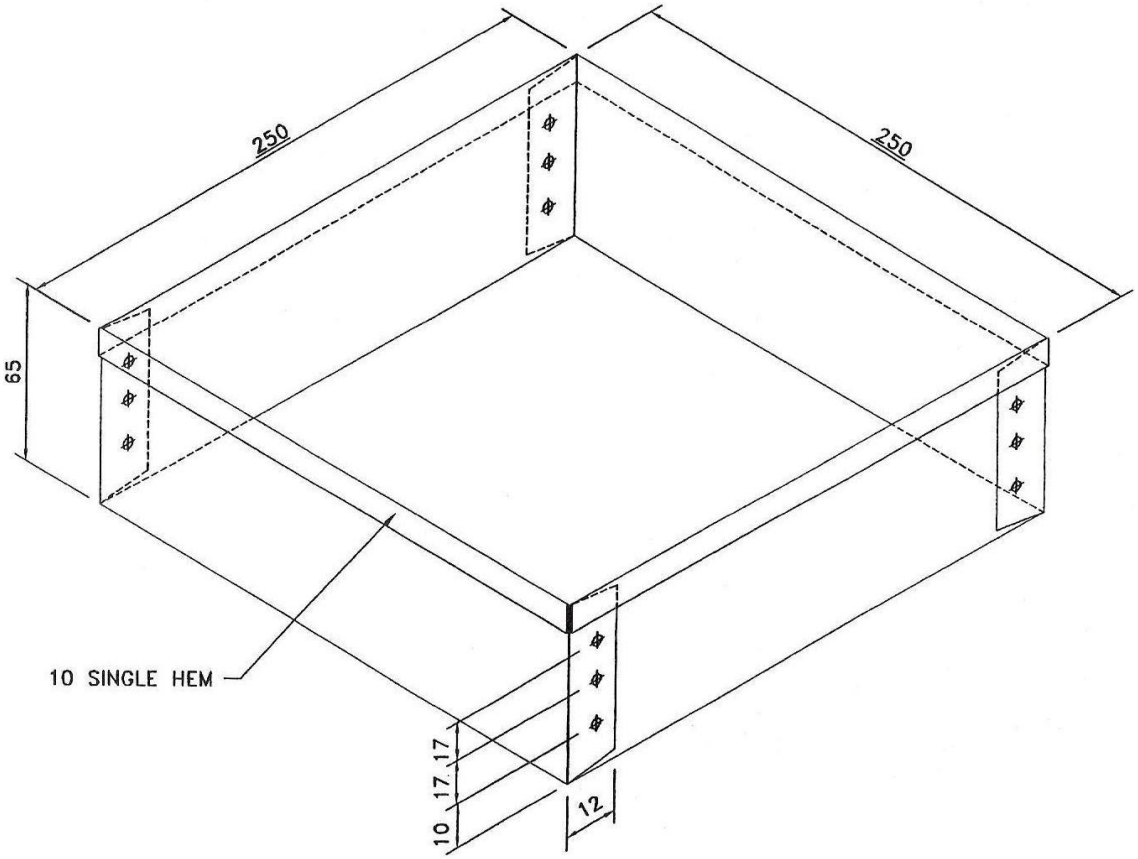

Figure 1 - One Piece Tray

Sequence of Operations

The bending sequence of the box is as follows:

1. Bend the safety hems first. Take care not to flatten the hems too much or you may experience difficulty later in the work.

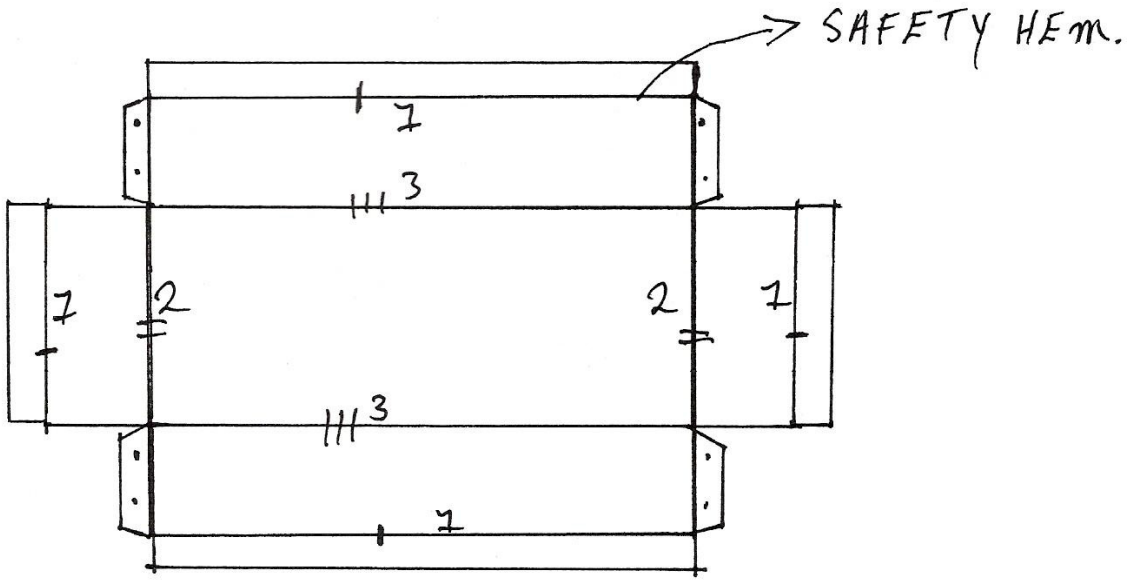

Figure 2 - Bending Sequence

2. Bend on the 2 line next so as to get the rivet allowance bent up neatly.
3. Finally bend on line 3.
4. It is advisable to drill the 8 rivet holes when the pattern is flat.
   Use size 3.25m *x* 9 or 4.0mm *x* 9 pop rivets.

Basic Patterns

While many of the patterns used by the sheet metal worker may differ in size or the various operations used, many patterns follow the same basic forms. The basic patterns shown represent the commonly used patterns and with appropriate notching.

The apprentice should study these patterns for their general shapes as well as for the allowances for seams and edges and for the method of notching.

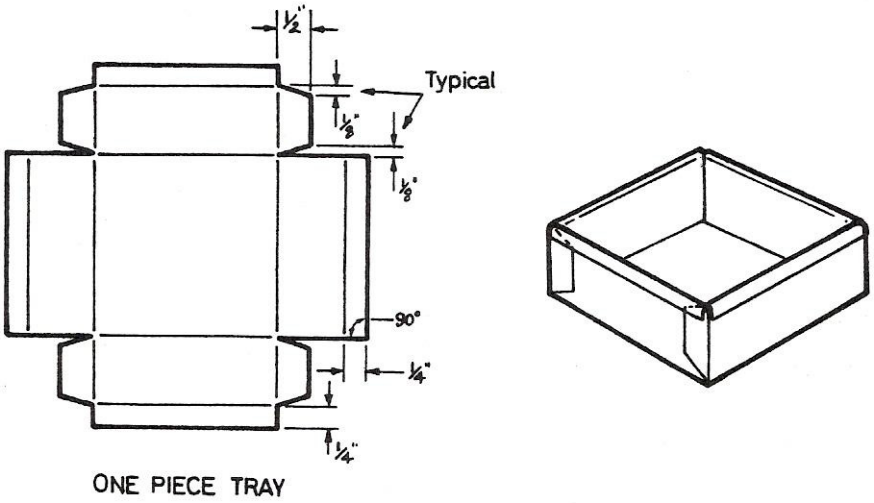

Figure 3 - One Piece Tray

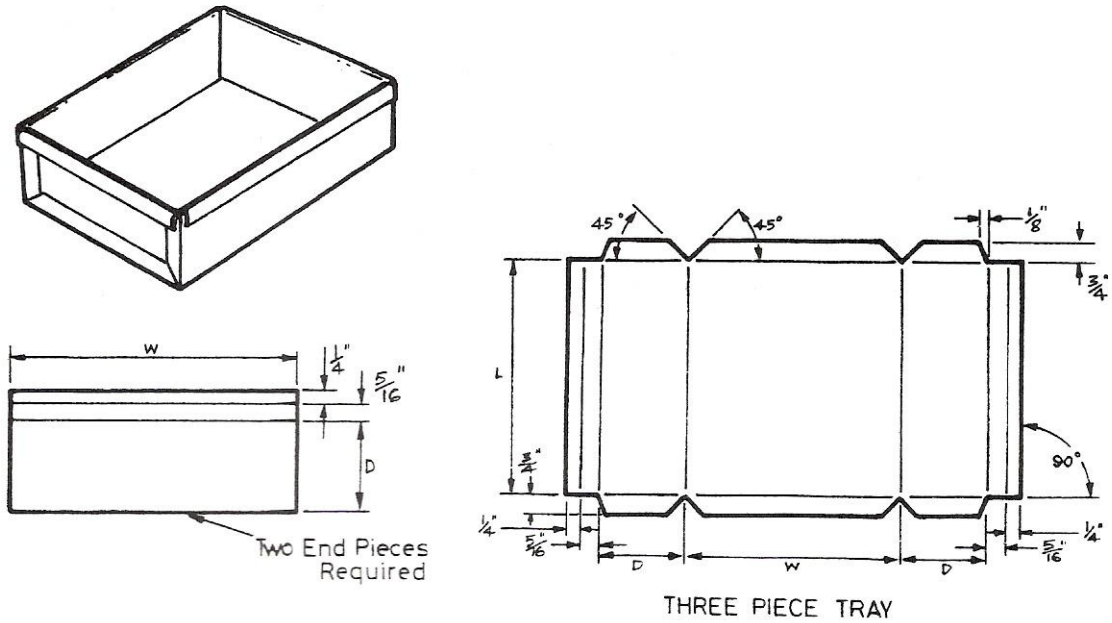

Figure 4 - Three Piece Tray

Notching Patterns

Notching

Notching is used to remove a portion of the metal to prevent overlapping and bulging on seams and edges.

Square Notch

The square notch is used on pans and boxes to enable the corners to fit together. The size of the notch is determined by the bend lines on the pattern.

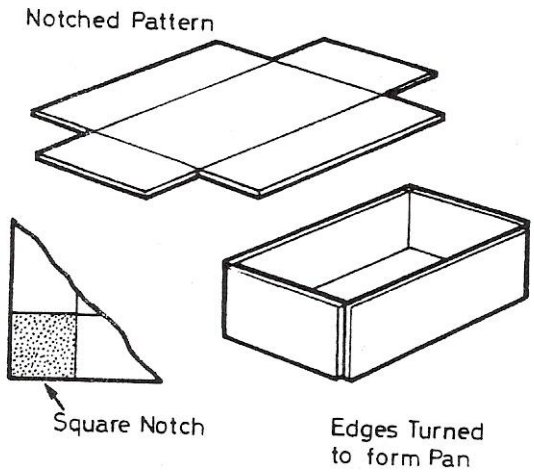

Figure 5 - Notching

45º Notch

The 45º notch, made in the form of a V, is used when making a knocked up joint or when making a 90º bend on any job with an inside flange. When the bend of an inside flange meets at an angle other than 90º, the notch must be marked to the necessary angle.

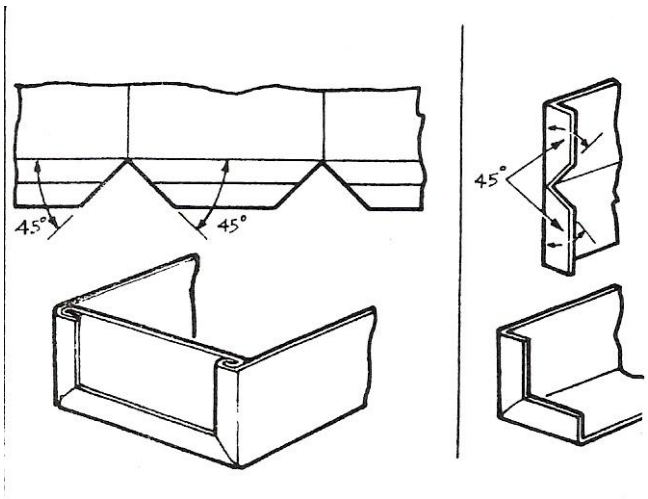

Figure 6 - 45º Notch

Straight Notch or Slit

An application for the straight notch or slit is shown in the diagram opposite.

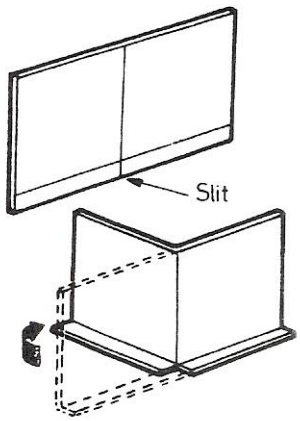

Figure 7 - Straight Notch or Slit

Notches for Wired Edges

In places where wired edges cross seams, the patterns notched to prevent overlapping. The angle of the notch is usually 30º and the distance from which the notch is started is 3½ times the wire diameter (approx).

The exact amount would be 3½ times wire diameter plus twice the thickness of the metal.

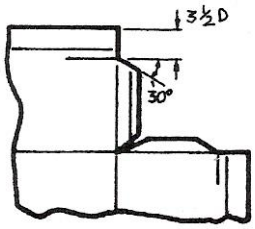

Figure 8 - Notches for Wired Edges

Notching for Single Hem

When a single hem meets at right angles, the pattern is notched at a 45º angle.

Angles other than 45º may be used depending upon the shape of the pattern. On some patterns a combination of these processes may be necessary.

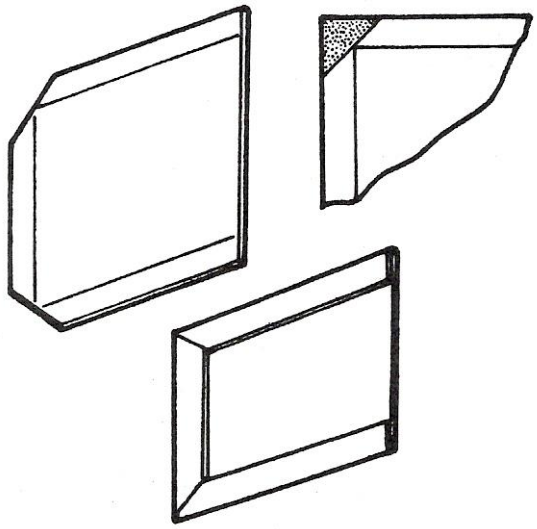

Figure 9 - Notching for Single Hem

Self Assessment

Questions on Background Notes – Module 1.Unit 9

1. Name and describe the two kinds of pinch-type rollers.

2. What is the minimum diameter you can roll on a rolling machine?

3. Why and how do we break the grain on a piece of metal?

4. Why preform metal?

5. Name three types of blows used on sheet metal.

6. What is the formula for the circumference of a circle?

Answers to Questions 1-6. Module 1.Unit 9

1.

Pinch Type-Rollers:

Roll Up Type:
The back roller adjusts up. This will allow any size of cylinder to be rolled in the machine.

Roll Down Type:
The back roller adjusts down, this type of roller will not roll more than will pass beneath the pedestal frame of the machine.

2.

The minimum diameter is in the order of :

1 ½ to 2 times the diameter of the roll on which it is being rolled.

3.

To prevent ridges forming on its surface roll the metal upwards and then downwards.

4.

To prevent flat spots either side of the joint after rolling.

5.

- Solid Blow
- Elastic Blow
- Floating Blow

6.

Formula for the Circumference of a Circle:

$2\pi R$ or πD

π = Pi

Index

B

Basic Patterns, 11

N

Notching Patterns, 12
- 45º Notch, 12
- Notches for Wired Edges, 13
- Notching, 12
- Notching for Single Hem, 14
- Square Notch, 12
- Straight Notch or Slit, 13

S

Sequence of Operations, 10